Fregadero monomando KITCHEN_CM002530

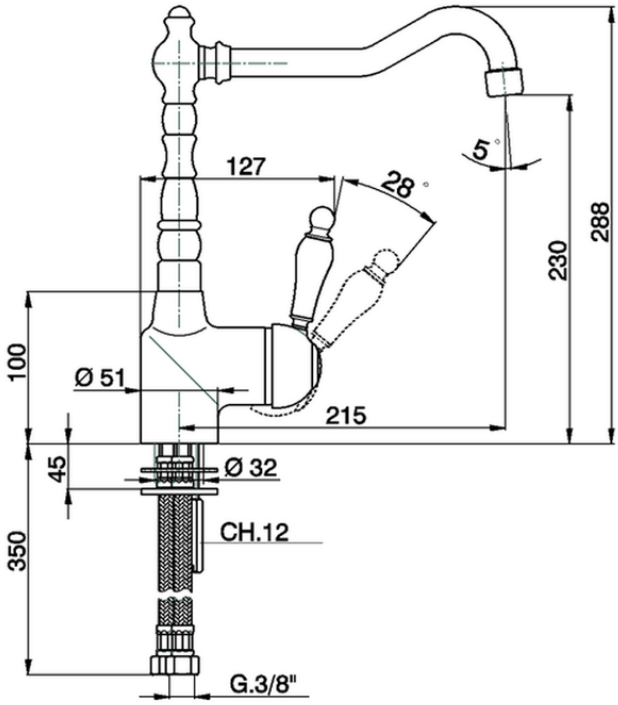

CM002530

https://es.huberitalia.com/fregadero-monomando-kitchen-cm002530

2026-06-15