Lavabo monomando large H3_AH000500

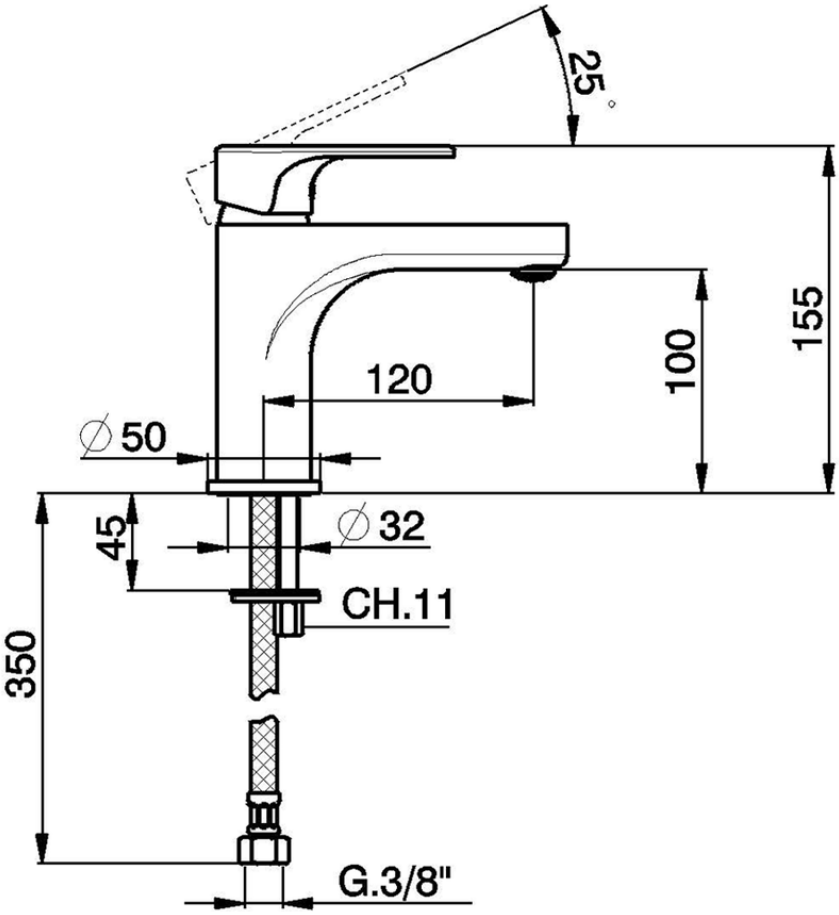

AH000500

https://es.huberitalia.com/lavabo-monomando-large-h3-ah000500

2026-04-09

© 2021 Huber. Via Brughiere, 50. 28017 - San Maurizio (NO) - Italy
Mail: huber@hubertitalia.com, Telefono: (+39) 0322 967783, P.Iva IT02422800033.