Lavabo monomando alto NUOVA KIRUNA_K2004540

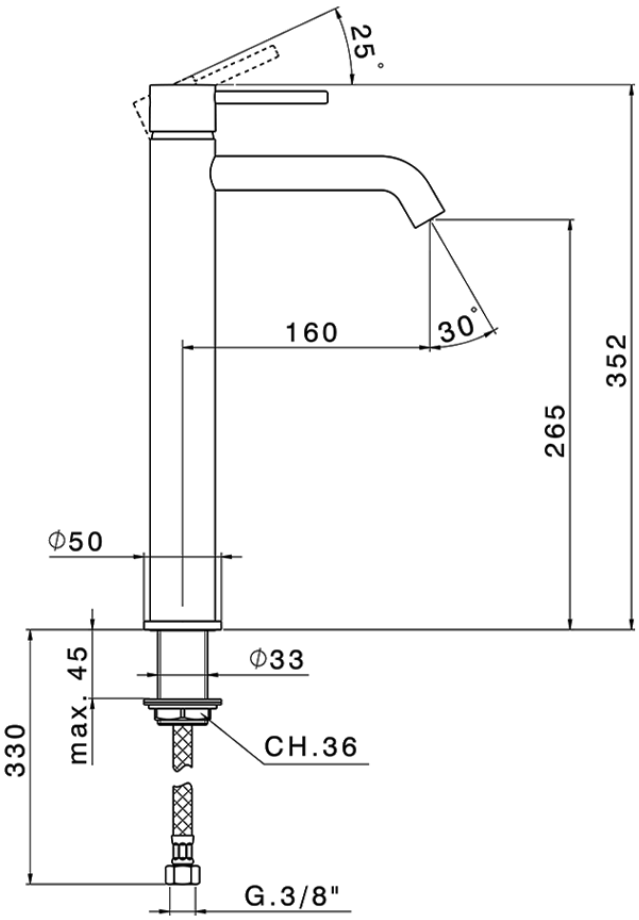

K2004540

https://es.huberitalia.com/lavabo-monomando-alto-nuova-kiruna-k2004540

2026-04-15

© 2021 Huber. Via Brughiere, 50. 28017 - San Maurizio (NO) - Italy
Mail: huber@hubertitalia.com, Telefono: (+39) 0322 967783, P.Iva IT02422800033.