Bañera termostática de suelo NUOVA KIRUNA_K2T39010

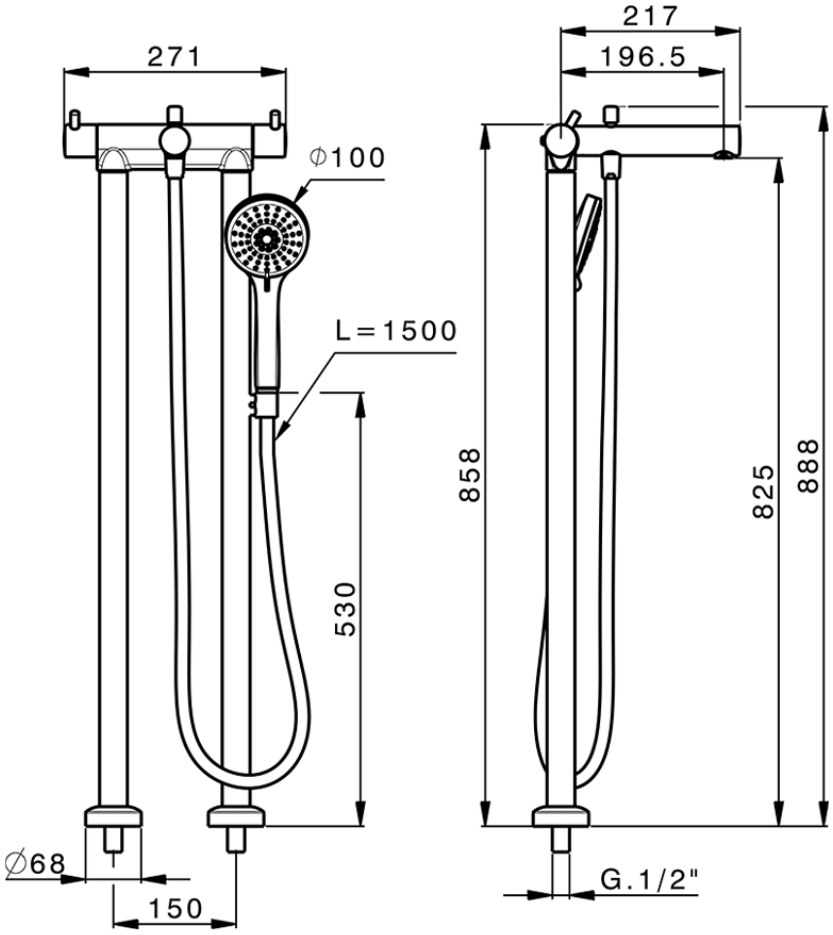

K2T39010 https://es.huberitalia.com/banera-termostatica-de-suelo-nuova-kiruna-k2t39010

2026-05-30

© 2021 Huber. Via Brughiere, 50. 28017 - San Maurizio (NO) - Italy
Mail: huber@hubertitalia.com, Telefono: (+39) 0322 967783, P.Iva IT02422800033.