Bañera termostática con barra-corrediza NUOVA KIRUNA_K2S23016

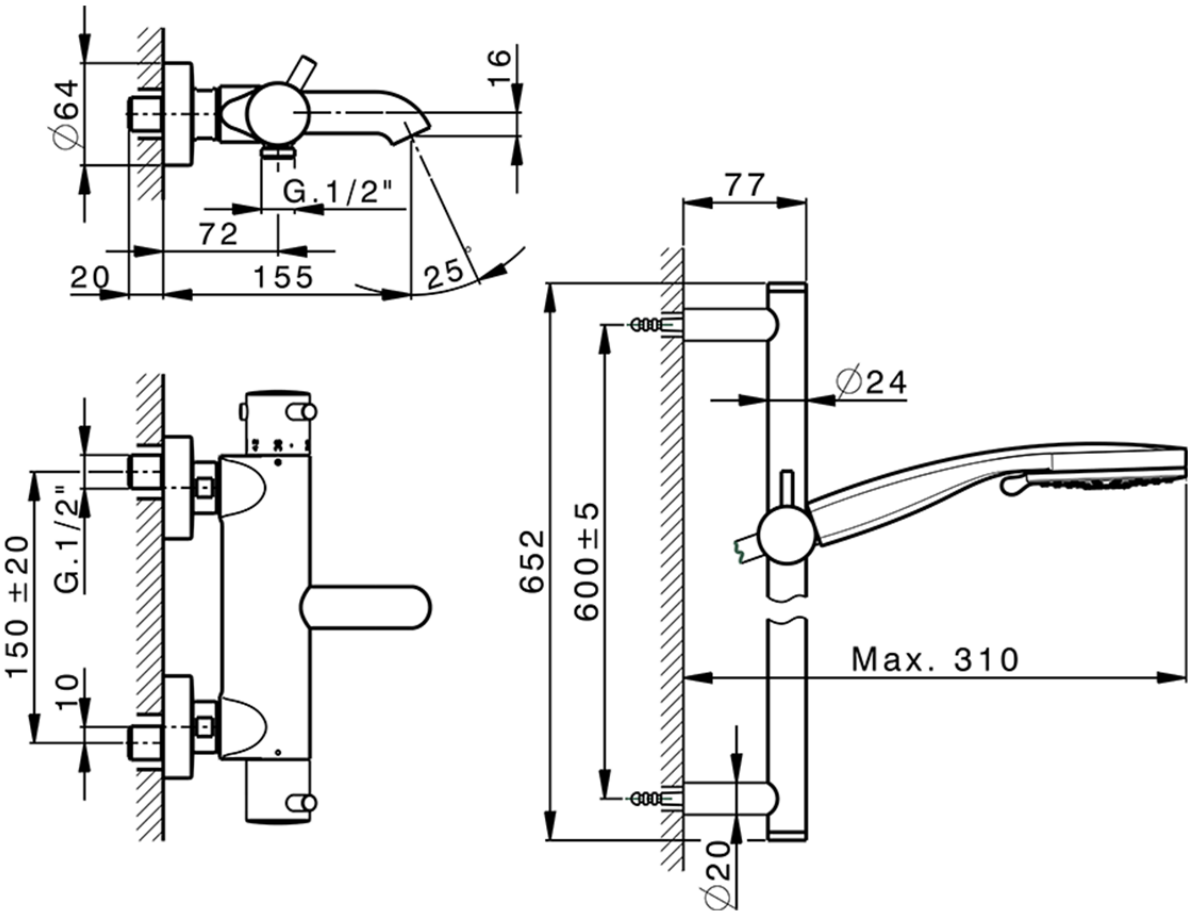

K2S23016 https://es.huberitalia.com/banera-termostatica-con-barra-corrediza-nuova-kiruna-k2s23016

2026-04-11

© 2021 Huber. Via Brughiere, 50. 28017 - San Maurizio (NO) - Italy
Mail: huber@hubertitalia.com, Telefono: (+39) 0322 967783, P.Iva IT02422800033.