Lavabo monomando alto M32_MT004544

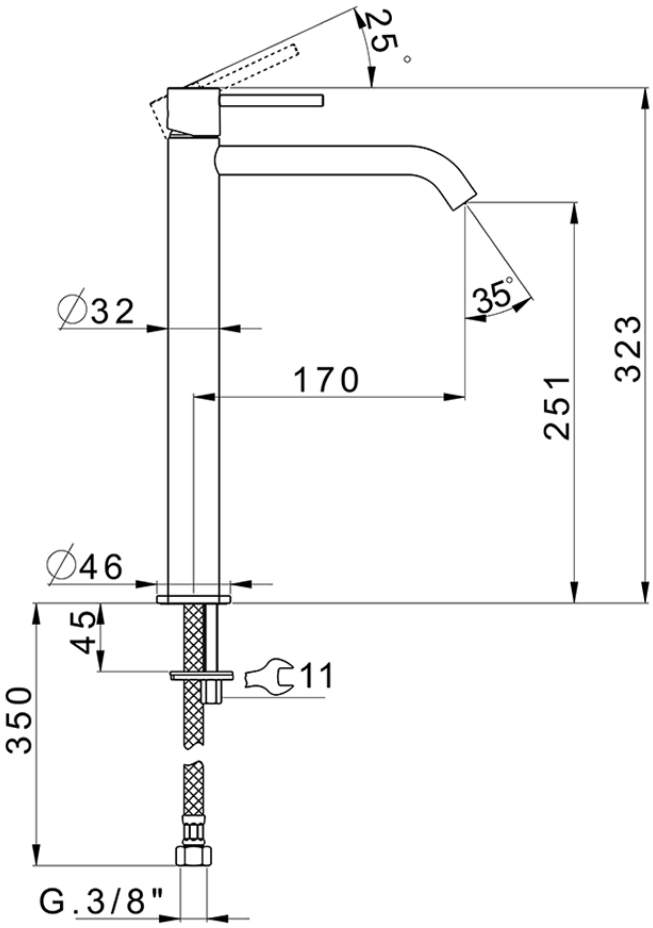

MT004544

https://es.huberitalia.com/lavabo-monomando-alto-m32-mt004544

2026-06-10

© 2021 Huber. Via Brughiere, 50. 28017 - San Maurizio (NO) - Italy
Mail: huber@hubertitalia.com, Telefono: (+39) 0322 967783, P.Iva IT02422800033.