Bidé monomando DADO_DC000550

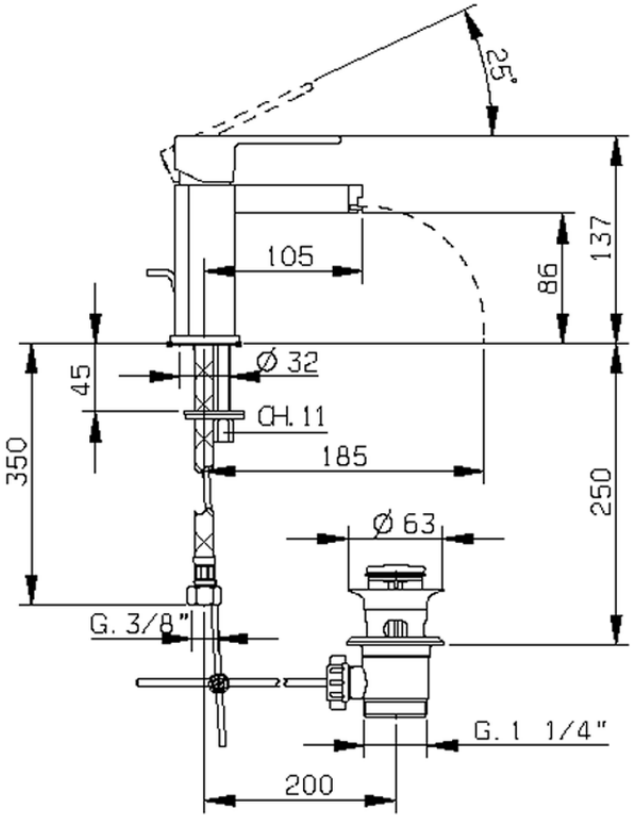

DC000550

https://es.huberitalia.com/bide-monomando-dado-dc000550

2026-05-20