Ducha termostática con duplex VICTORIAN_VTD01010

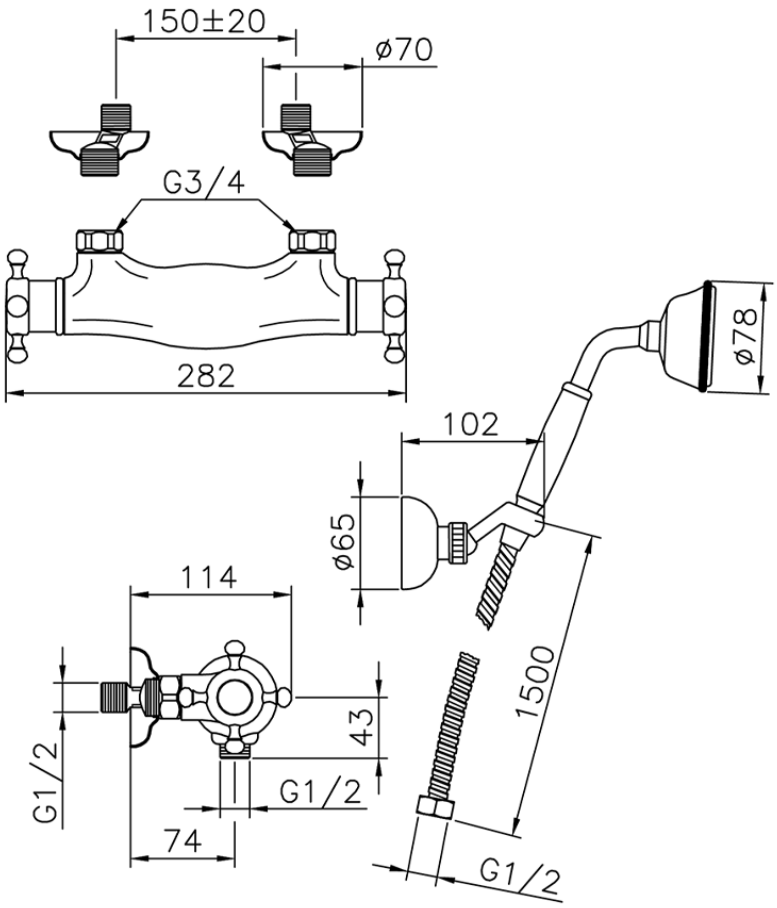

VTD01010 https://es.huberitalia.com/ducha-termostatica-con-duplex-victorian-vtd01010

2026-04-29

© 2021 Huber. Via Brughiere, 50. 28017 - San Maurizio (NO) - Italy
Mail: huber@hubertitalia.com, Telefono: (+39) 0322 967783, P.Iva IT02422800033.