Lavabo monomando EnergySave H3_AH003545

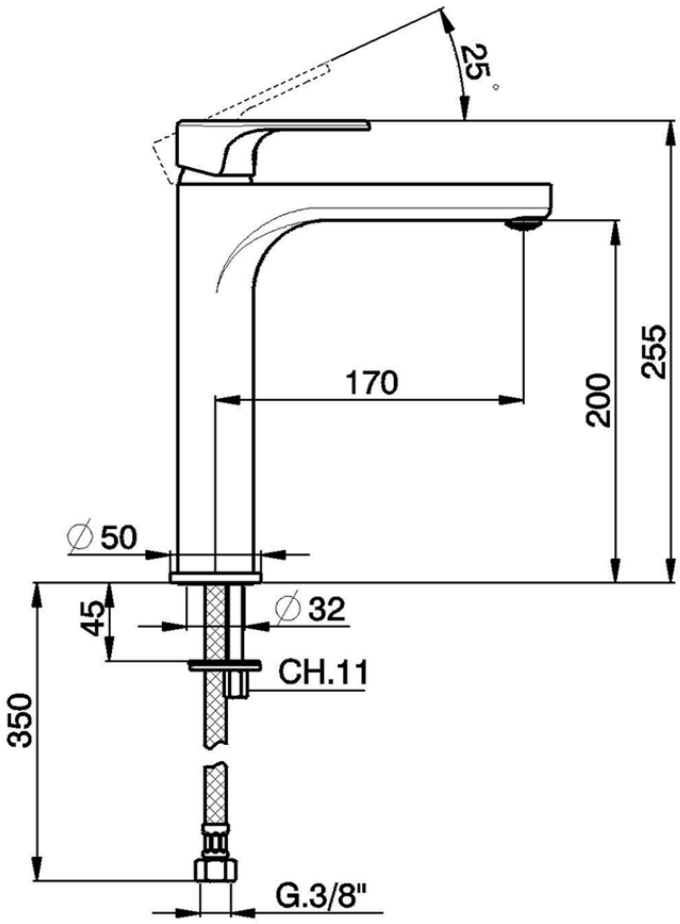

AH003545

https://es.huberitalia.com/lavabo-monomando-energysave-h3-ah003545

2026-06-15

© 2021 Huber. Via Brughiere, 50. 28017 - San Maurizio (NO) - Italy
Mail: huber@hubertitalia.com, Telefono: (+39) 0322 967783, P.Iva IT02422800033.