Bidé monomando large TRATTO EVO_TV000590

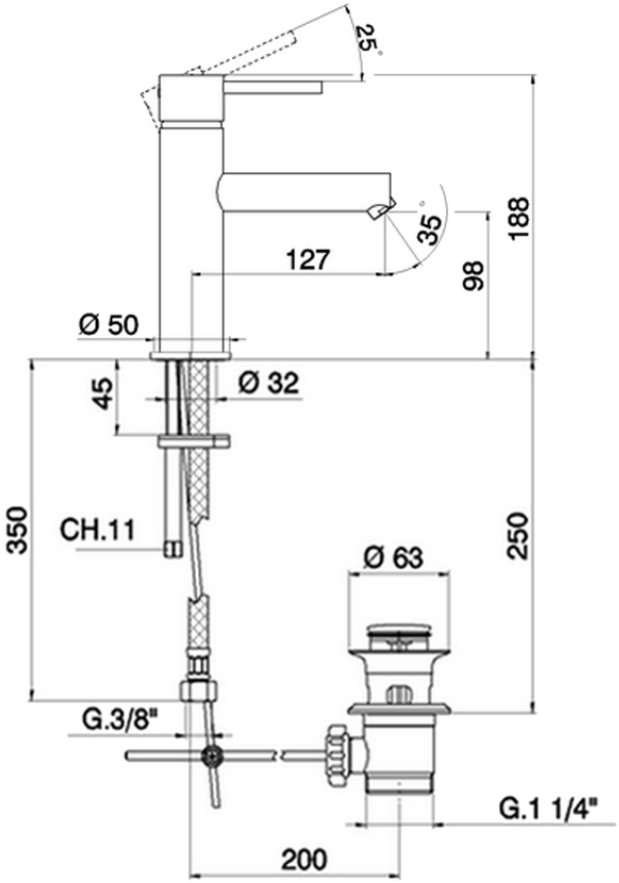

TV000590

https://es.huberitalia.com/bide-monomando-large-tratto-evo-tv000590

2026-03-23

© 2021 Huber. Via Brughiere, 50. 28017 - San Maurizio (NO) - Italy
Mail: huber@hubertitalia.com, Telefono: (+39) 0322 967783, P.Iva IT02422800033.