Bidé monomando EnergySave H2_H2000555

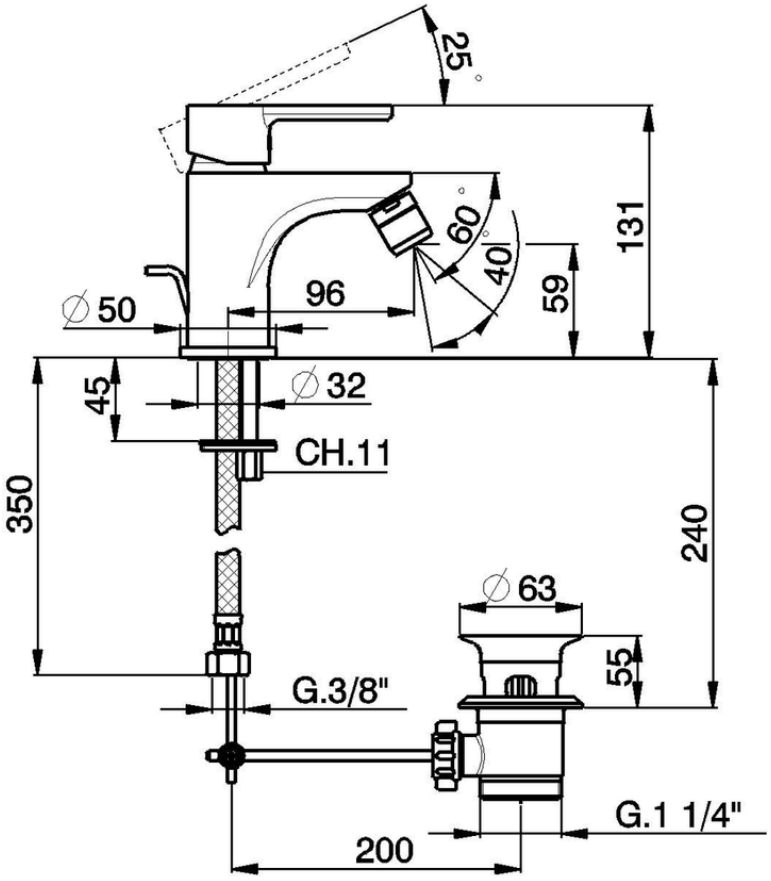

H2000555

https://es.huberitalia.com/bide-monomando-energysave-h2-h2000555

2026-05-20

© 2021 Huber. Via Brughiere, 50. 28017 - San Maurizio (NO) - Italy
Mail: huber@hubertitalia.com, Telefono: (+39) 0322 967783, P.Iva IT02422800033.