Bidé termostático THERMO_CPT55010

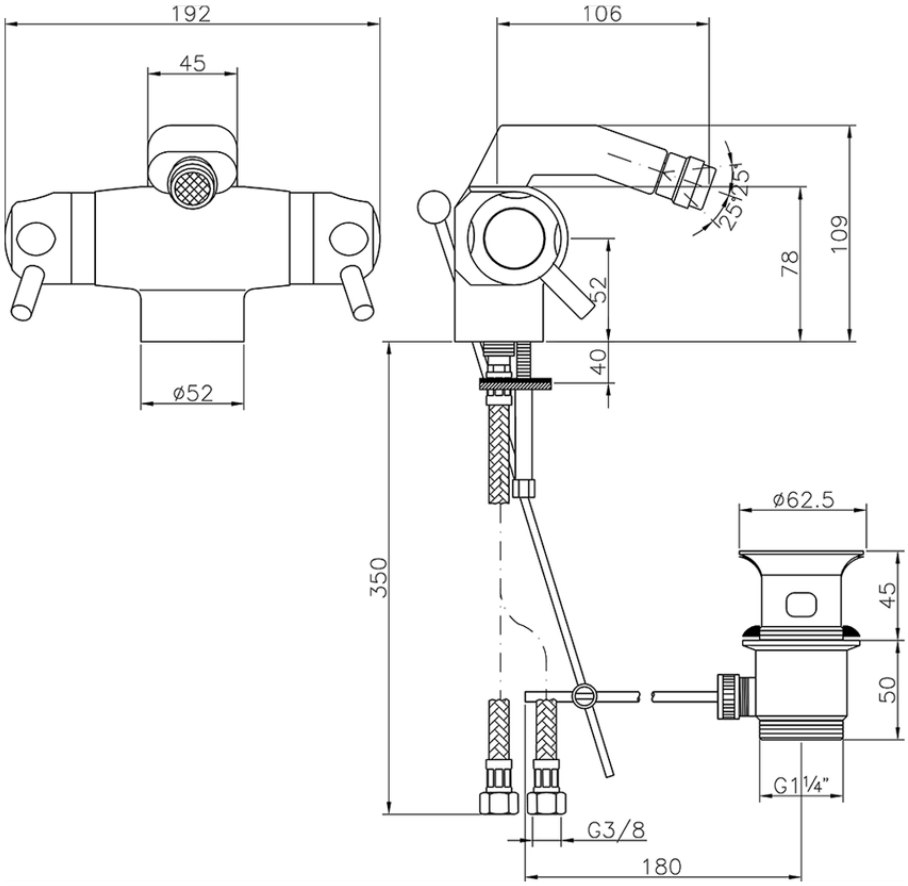

CPT55010

https://es.huberitalia.com/bide-termostatico-thermo-cpt55010

2026-04-29