Parte externa monomando lavabo de pared HARLOCK_HC005512

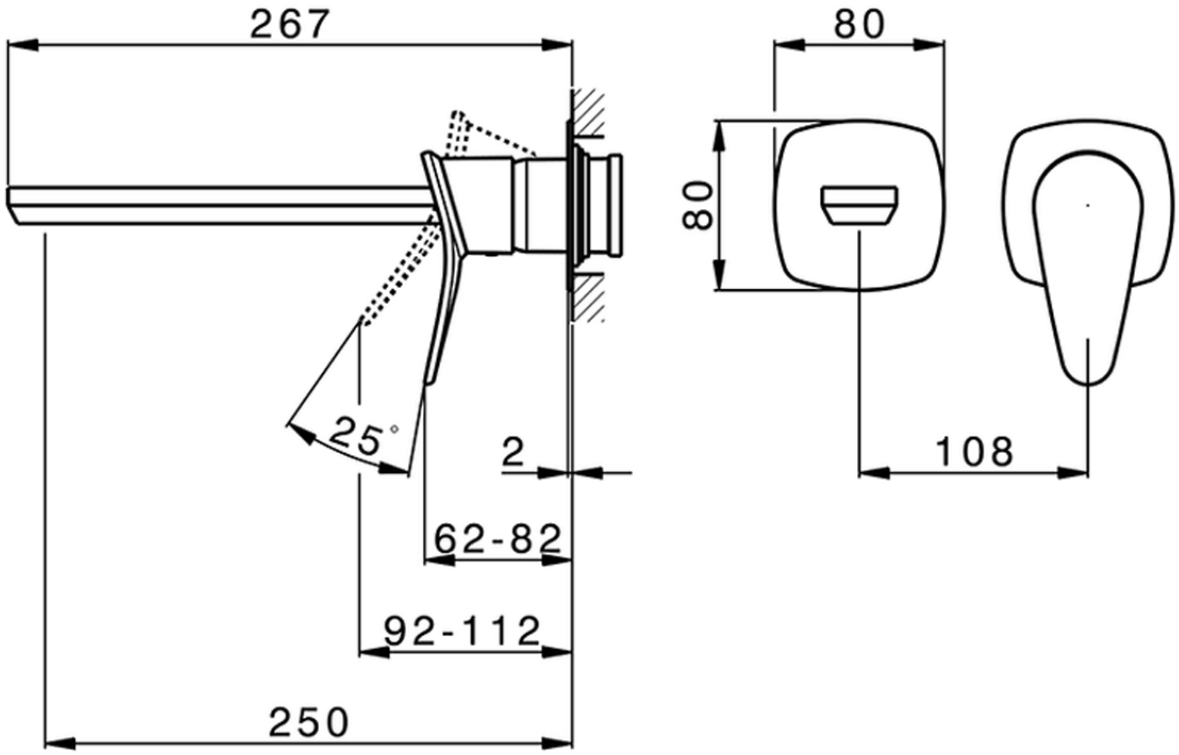

HC005512 https://es.huberitalia.com/parte-externa-monomando-lavabo-de-pared-harlock-hc005512

© 2021 Huber. Via Brughiere, 50. 28017 - San Maurizio (NO) - Italy
Mail: huber@hubertitalia.com, Telefono: (+39) 0322 967783, P.Iva IT02422800033.

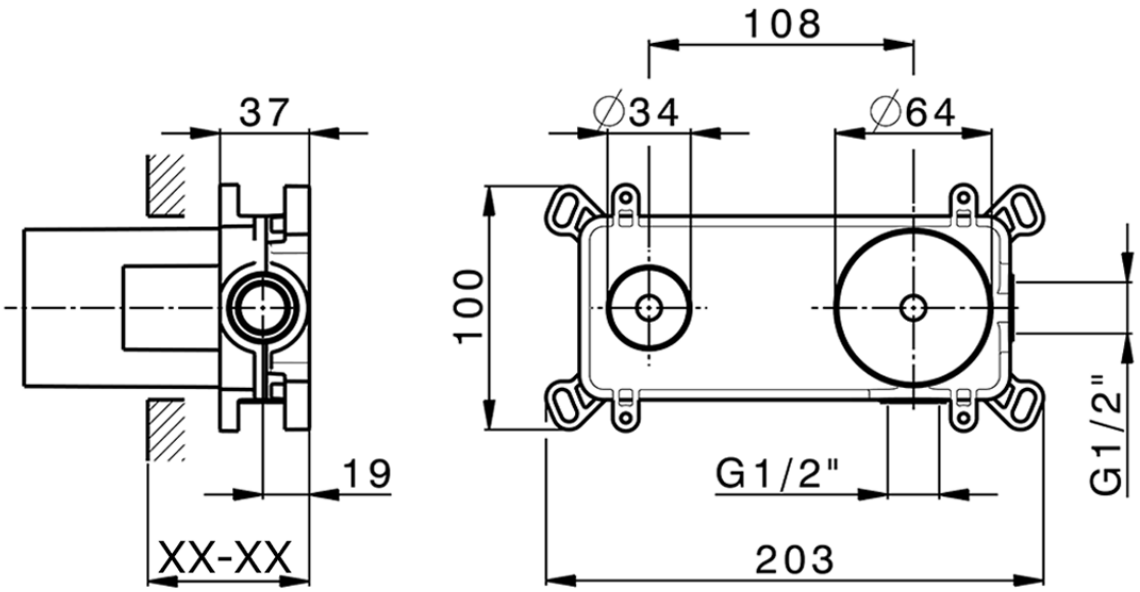

Piastra/Plate/Plaque/Platte/Placa

2-3mm: XX 56-76

10mm: XX 48-68

ZB002450 https://es.huberitalia.com/parte-empotrada-monomando-lavabo-de-pared-easy-box-empotrado-zb002450

2026-10-11

© 2021 Huber. Via Brughiere, 50. 28017 - San Maurizio (NO) - Italy
Mail: huber@hubertitalia.com, Telefono: (+39) 0322 967783, P.Iva IT02422800033.