Columna termostática bañera 3 funciones VICTORIAN_592.VN31H.

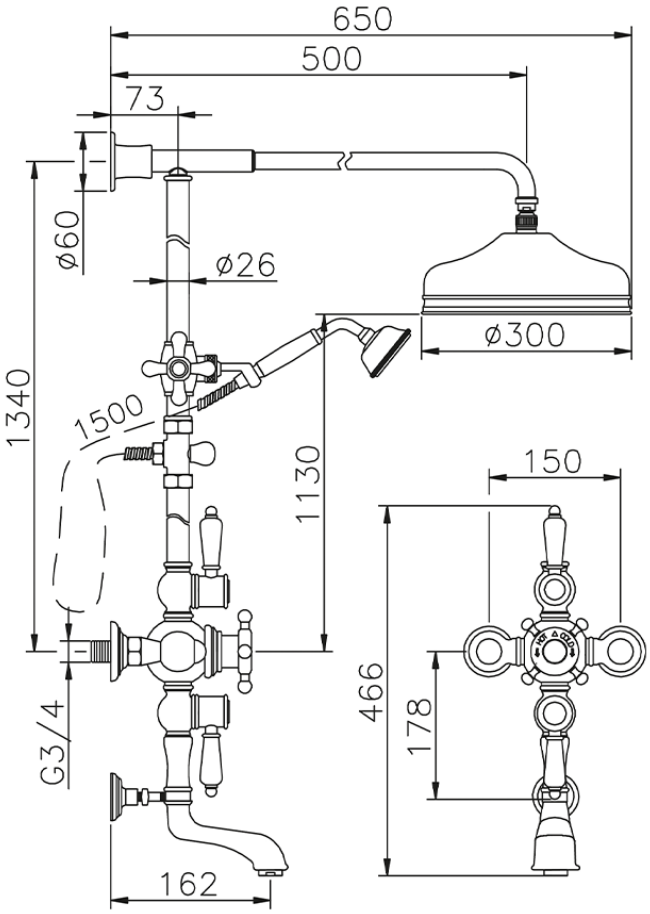

592.VN31H. https://es.huberitalia.com/columna-termostatica-banera-3-funciones-victorian-592-vn31h

2026-04-21

© 2021 Huber. Via Brughiere, 50. 28017 - San Maurizio (NO) - Italy
Mail: huber@hubertitalia.com, Telefono: (+39) 0322 967783, P.Iva IT02422800033.