Bidé monomando LEVITY_LY000560

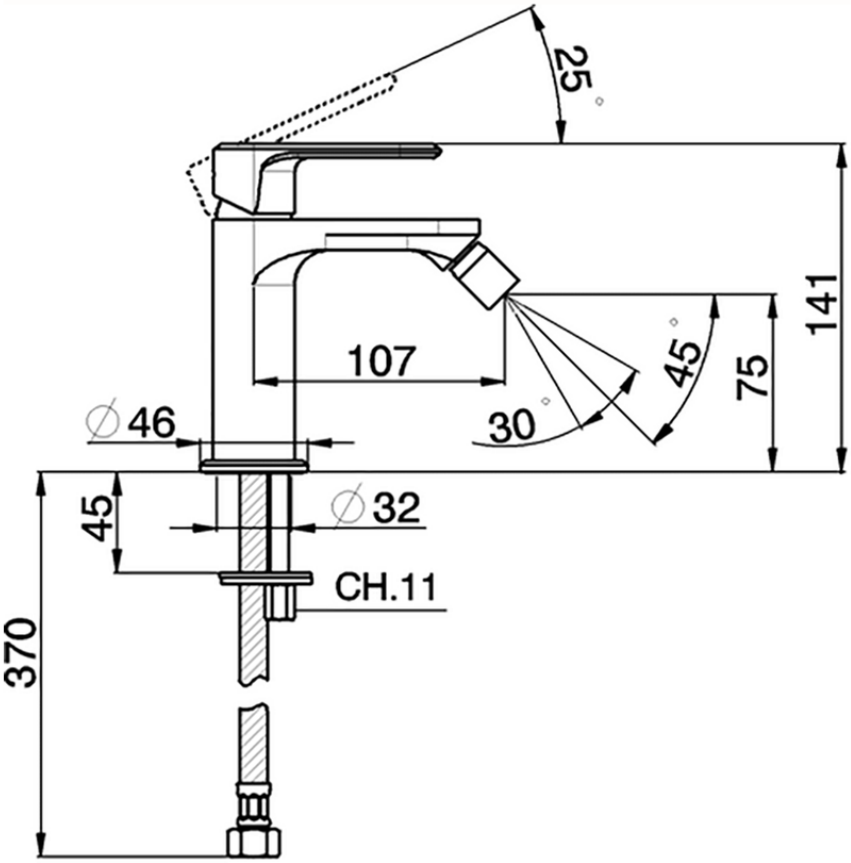

LY000560

https://es.huberitalia.com/bide-monomando-levity-ly000560

2026-06-15