Bidé monomando LEVITY_LY000560

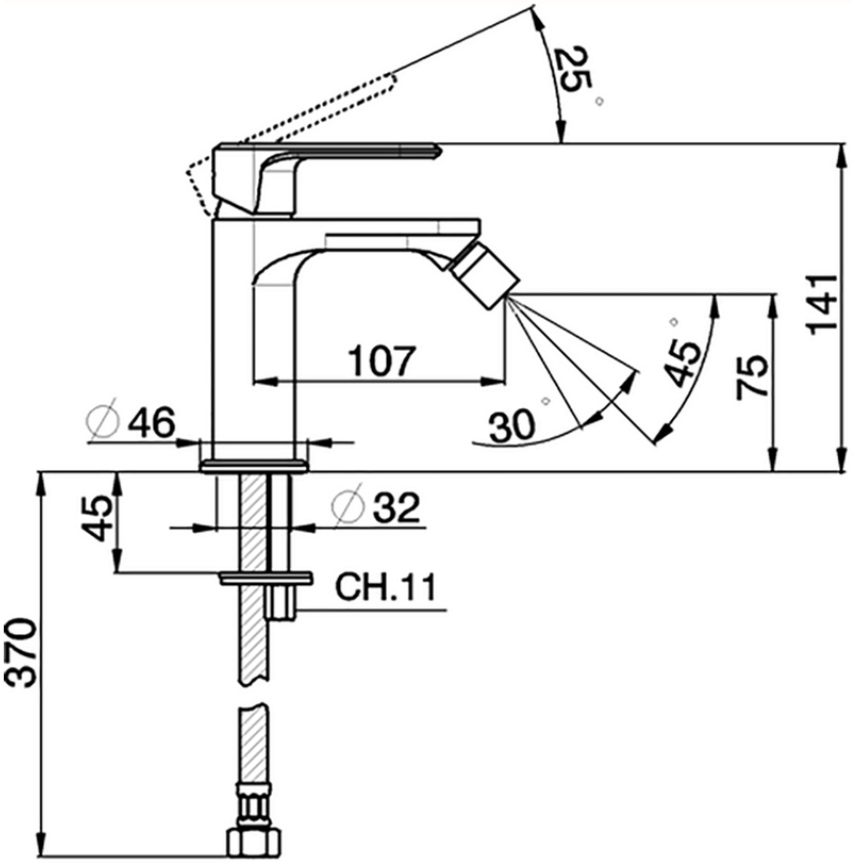

LY000560

https://es.huberitalia.com/bide-monomando-levity-ly000560

2026-06-13

© 2021 Huber. Via Brughiere, 50. 28017 - San Maurizio (NO) - Italy
Mail: huber@hubertitalia.com, Telefono: (+39) 0322 967783, P.Iva IT02422800033.