Bañera termostática con barra-corrediza SUITE_SUS27010

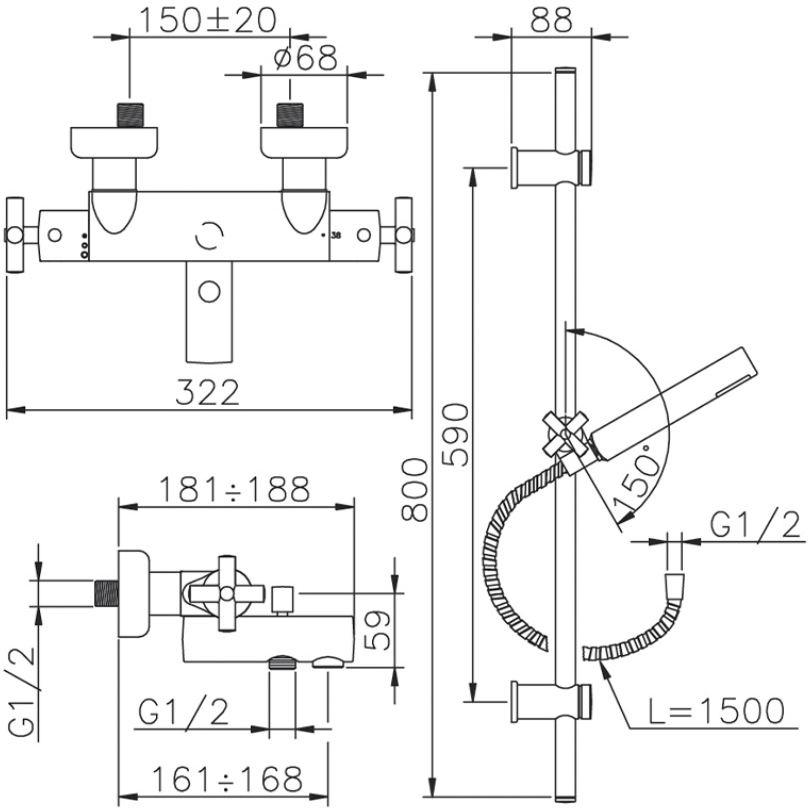

SUS27010

https://es.huberitalia.com/banera-termostatica-con-barra-corrediza-suite-sus27010

2026-01-10

© 2021 Huber. Via Brughiere, 50. 28017 - San Maurizio (NO) - Italy
Mail: huber@hubertitalia.com, Telefono: (+39) 0322 967783, P.Iva IT02422800033.