Bidé termostático VICTORIAN_VTT56010

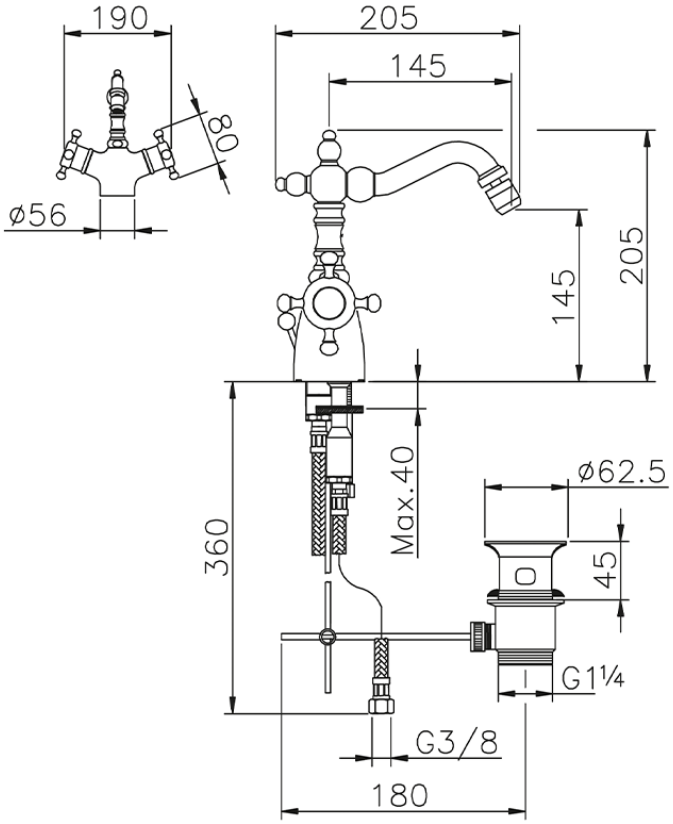

VTT56010

https://es.huberitalia.com/bide-termostatico-victorian-vtt56010

2026-05-20

© 2021 Huber. Via Brughiere, 50. 28017 - San Maurizio (NO) - Italy
Mail: huber@hubertitalia.com, Telefono: (+39) 0322 967783, P.Iva IT02422800033.