# CombiShower with Diverter COLUMNS_SSV72010

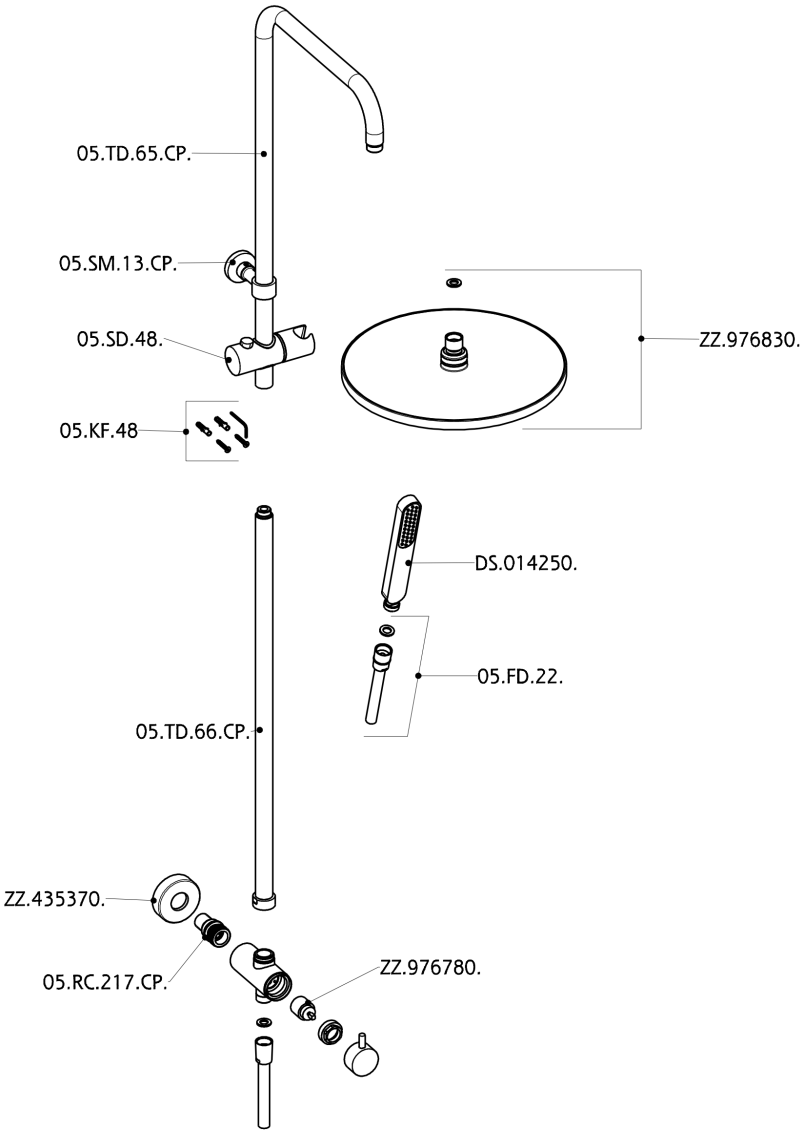


SSV72010

https://es.huberitalia.com/combishower-with-diverter-columns-ssv72010

2026-07-03

© 2021 Huber. Via Brughiere, 50. 28017 - San Maurizio (NO) - Italy
Mail: huber@hubertitalia.com, Telefono: (+39) 0322 967783, P.Iva IT02422800033.