Bidé monomando DADO_DD000560

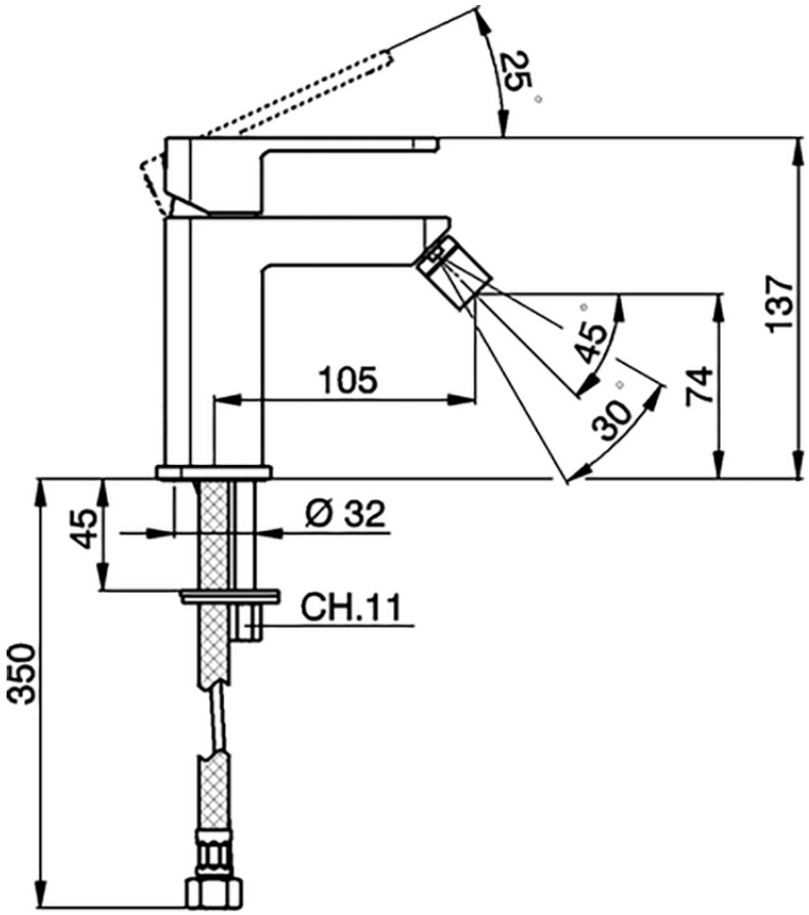

DD000560

https://es.huberitalia.com/bide-monomando-dado-dd000560

2026-06-13