Fregadero monomando ducha extraíble KITCHEN_AT402570

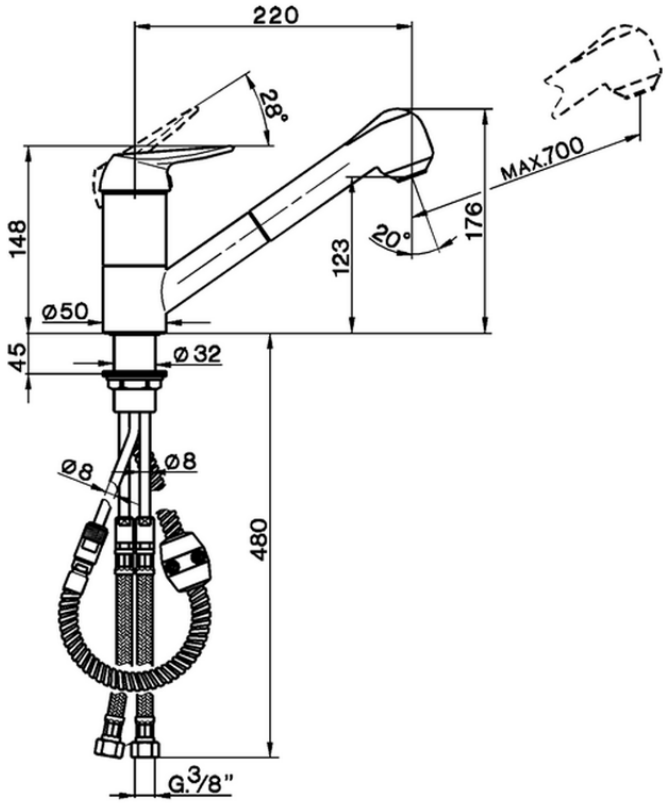

AT402570 https://es.huberitalia.com/fregadero-monomando-ducha-extraible-kitchen-at402570

2024-09-19

© 2021 Huber. Via Brughiere, 50. 28017 - San Maurizio (NO) - Italy
Mail: huber@hubertitalia.com, Telefono: (+39) 0322 967783, P.Iva IT02422800033.