Lavabo monomando EnergySave H2_H2000475

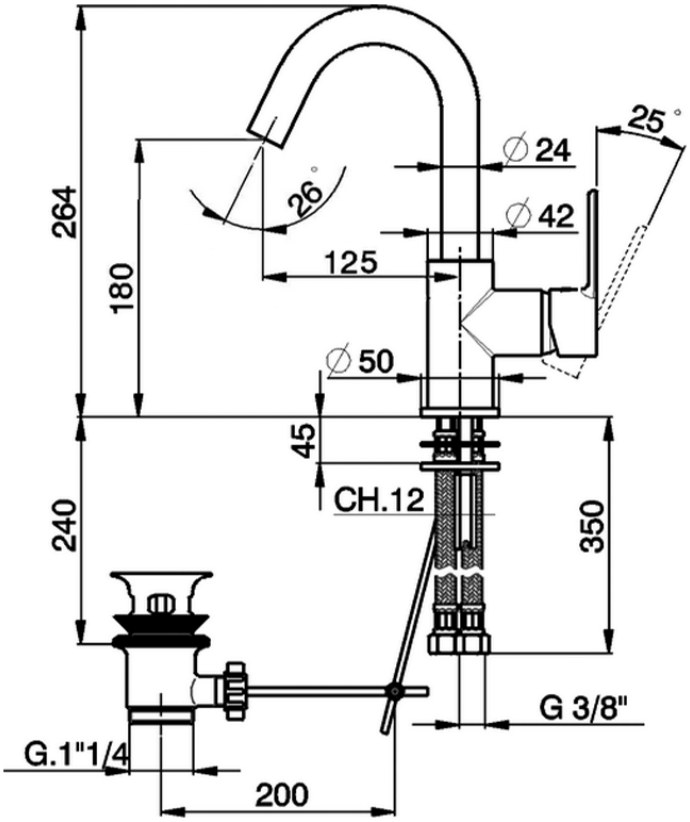

H2000475 https://es.huberitalia.com/lavabo-monomando-energysave-h2-h2000475

2026-06-26