Bañera termostática con duplex H2_H2D21010

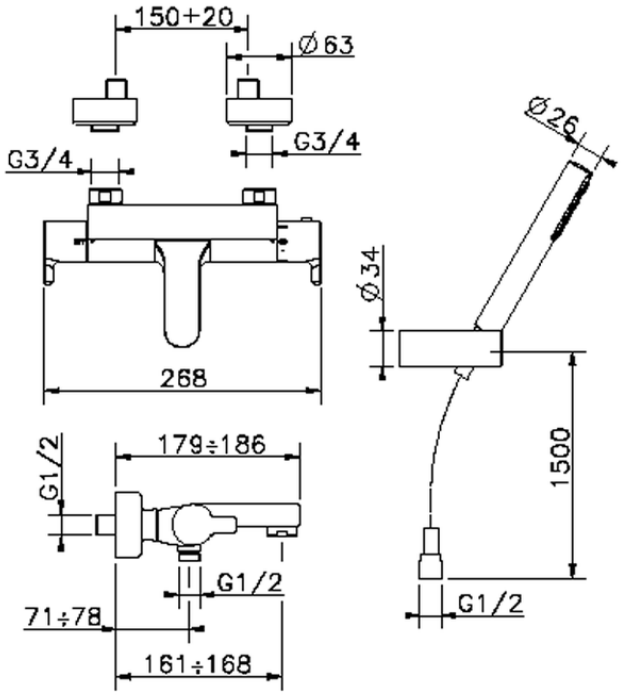

H2D21010

https://es.huberitalia.com/banera-termostatica-con-duplex-h2-h2d21010

2026-06-10