Bañera termostática SUITE_SUT27010

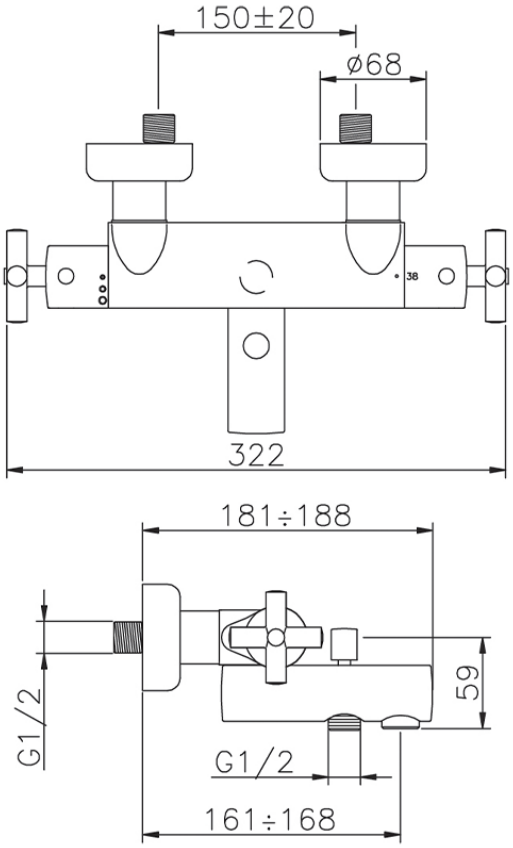

SUT27010

https://es.huberitalia.com/banera-termostatica-suite-sut27010

2026-06-15