Lavabo monomando NUOVA KIRUNA_K2000510

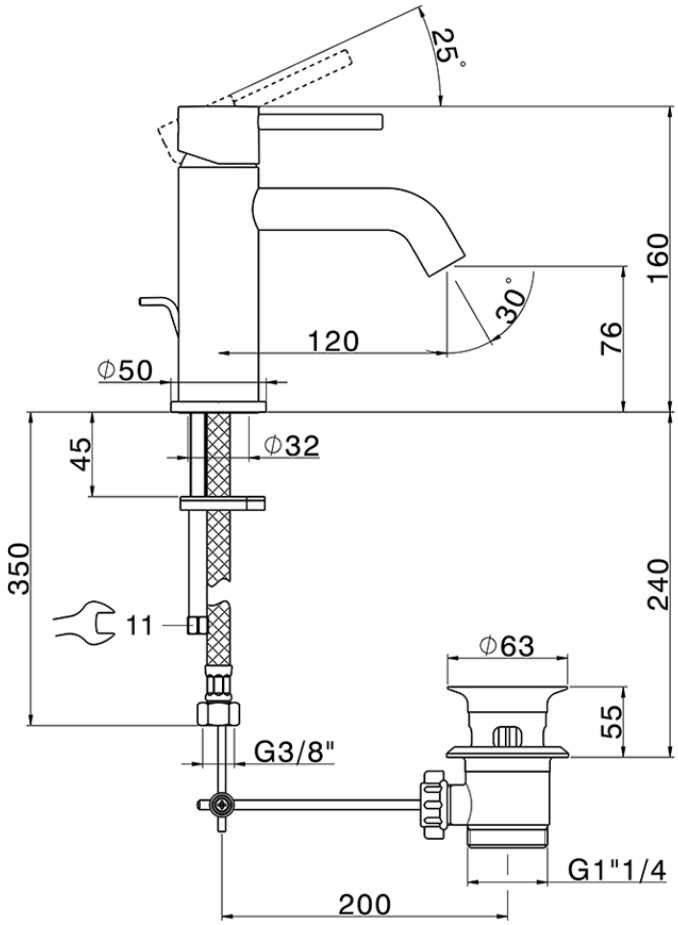

K2000510

https://es.huberitalia.com/lavabo-monomando-nuova-kiruna-k2000510

2026-07-03